MICRO-EPSILON

Operating Instructions

optoCONTROL EDU190

EDU190-4 Pro
EDU190-7 Pro

Digital Display

MICRO-EPSILON
Eltrotec GmbH
Manfred-Wörner-Straße 101
73037 Göppingen / Germany

Tel. +49 (0) 7161 / 98872-300
Fax +49 (0) 7161 / 98872-303
eltrotec@micro-epsilon.de
www.micro-epsilon.com

Contents

Appendix

1. Safety

System operation assumes knowledge of the operating instructions.

1.1 Symbols Used

The following symbols are used in these operating instructions:

⚠ WARNUNG	Indicates a hazardous situation which, if not avoided, could result in death or serious injury.
⚠ CAUTION	Indicates a hazardous situation which, if not avoided, may result in minor or moderate injury.
NOTICE	Indicates a situation that may result in property damage if not avoided.
➡	Indicates a user action.
i	Indicates a tip for users.
`Measure`	Indicates hardware or a software button/menu.

1.2 Warnings

⚠ WARNING

Avoid use in Ex areas.
> Death or injury due to explosion hazard

Liquids, metal swarf and wire parts may not enter the openings of the digital display under any circumstances.
> Electric shock, risk of fire

⚠ CAUTION

The digital display liquid contains a powerful irritant. In case of skin contact, wash immediately with plenty of water. In case of eye contact, hold the eye open, flush with plenty of water and get medical attention.
> Risk of injury, damage to the eyes or skin

Connect the power supply according to the safety regulations for electrical equipment.
> Risk of injury, damage to or destruction of the system

NOTICE

The supply voltage must not exceed the specified limits.
> Damage to or destruction of digital display

No sharp or heavy objects should be allowed to affect the cables. Avoid folding the cables. Do not bend more tightly than the minimum bending radius of the cables.
> Damage to or destruction of the cables, failure of the digital display

Avoid shocks and impacts to the digital display.

> Damage to or destruction of the digital display

Storing the digital display where the temperature is lower/higher than recommended in the technical data can cause the LCD display liquid to congeal/become isotopic.
> Damage to or destruction of digital display

Avoid use in direct sunlight, strong magnetic fields, high temperatures and sudden temperature changes.
> Color alterations on the display or system failure

1.3 Notes on CE Marking

The following apply to the optoCONTROL EDU190:
- EU Directive 2014/30/EU
- EU Directive 2011/65/EU

Products which carry the CE mark satisfy the requirements of the EU directives cited and the European harmonized standards (EN) listed therein. The EU Declaration of Conformity is available to the responsible authorities according to EU Directive, article 10, at:

MICRO-EPSILON Eltrotec GmbH
Manfred-Wörner-Straße 101
73037 Göppingen /Germany

The measuring system is designed for use in industrial environments and meets the requirements.

1.4 Intended Use

The optoCONTROL EDU190 digital display is designed for use in industrial and laboratory applications. It is used to display the measurement values and parameters of all optical optoCONTROL ODC micrometers with digital interface.

The system must only be operated within the limits specified in the technical data, see 2.2.

- The system must be used in such a way that no persons are endangered or machines and other material goods are damaged in the event of malfunction or total failure of the sensor.
- Take additional precautions for safety and damage prevention in case of safety-related applications.

1.5 Proper Environment

- Protection class:
  - Front panel: IP 66 (EDU190-4 Pro), IP 65 (EDU190-7 Pro)
  - Rear: IP 20
- Operating temperature: -10 ... +60 °C (+14 ... +140 °F)
- Storage temperature: -20 ... +70 °C (-4 ... +158 °F)
- Ambient pressure: Atmospheric pressure

2. Functional Principle, Technical Data

2.1 Functional Principle

The optoCONTROL EDU190 digital display enables measurements to be performed on semi-automated workstations quickly and easily, while visualizing and evaluating the measured value without requiring any additional end devices.

The digital display is compatible with all optical micrometers from Micro-Epsilon that have a digital interface.

The sensors can be connected either serially (RS232, RS422) or via Ethernet.

i Multi-segment measurements are not possible.

2.2 Technical Data

Model		EDU190-4 Pro	EDU190-7 Pro
Display size (diagonal)		4.3 inches	7 inches
Resolution		480 x 272 pixels	800 x 480 pixels
Service life (backlight)		50,000 operating hours	20,000 operating hours
Display type		TFT-LCD	
System		1.0 GHz processor with 512 MB RAM	
Number of digits		max. 5 digits	
Baud rate		115.2 kBd	
Screen operation		resistive (touch)	
Display		1 x multicolor LED display	
Serial interface		RS232 or RS422	
Digital interface		Ethernet (RJ45 socket)	
Supply voltage		18 … 32 VDC	
Power consumption		12 W (24 V)	14.4 W (24 V)
Humidity		5 - 85 % (non-condensing)	
Temperature range	Storage	-20 °C … +70 °C (-4 ... +158 °F)	
	Operation	-10 °C … +60 °C (+14 ... +140 °F)	
Protection class	front	IP 66	IP 65
	rear	IP 20	
Shock		15 g, semi-sinusoidal, 11 ms (IEC60068-2-27)	
Vibration		1 g (IEC60068-2-6)	
Certifications		CE, UL 61010-2-201	
Weight		approx. 0.5 kg	approx. 0.8 kg

Model		**EDU190-4 Pro**	**EDU190-7 Pro**
Material	Display	polyester on glass, ITO film	
	Housing (rear)	powder-coated aluminum	
	Frame material	Autoflex EBA 180L	
Installation		front panel installation	
Cut-out dimensions		130 x 89 mm	189 x 128 mm

3. Delivery

3.1 Unpacking/Included in Delivery

1 Digital display
1 Assembly instructions
1 Gender changer
4 Holding clamps for installation of digital display

➡ Carefully remove the components of the measuring system from the packaging and ensure that the goods are forwarded in such a way that no damage can occur.

➡ Check the delivery for completeness and shipping damage immediately after unpacking.

➡ If there is damage or parts are missing, immediately contact the manufacturer or supplier.

Optional accessories are available in the appendix, see A 1.

3.2 Storage

Storage temperature:	-20 ... +70 °C (-4 ... +158 °F)
Humidity:	5 to 85 % (non-condensing)

4. Installation and Assembly

- Place the digital display on a stable surface during installation.
- Use the cut out dimensions in the technical data, see operating instructions.
- Install the digital display into the panel cut-out.
- Secure the digital display by screwing the recesses head screw clockwise, allowing the built-in bracket to flip out and tighten against the cabinet.
- Tighten the screws from 0.5 to 1.0 Nm.

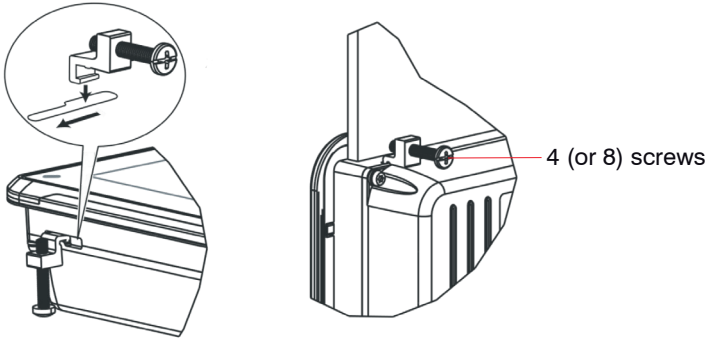

Fig. 1 Installation of digital display

WARNING

Avoid use in Ex areas.
> Death or injury due to explosion hazard

NOTICE

Avoid use in direct sunlight, strong magnetic fields, high temperatures and sudden temperature changes.
> Color alterations on the display or system failure

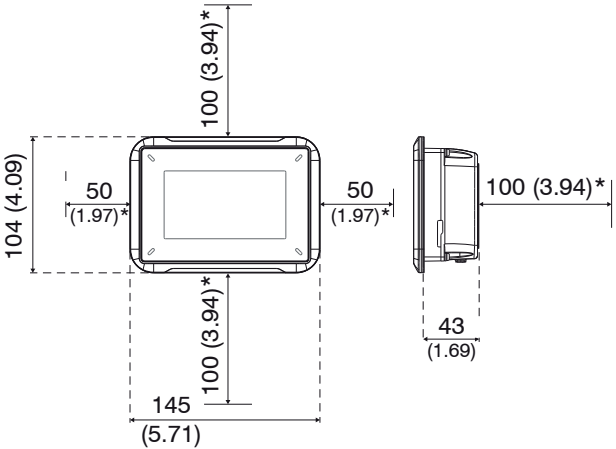

Cut out dimensions for the installation of the digital display: 130 x 89 mm (5.12 x 3.50 inches)

Fig. 2 Dimensional drawing optoCONTROL EDU190-4 Pro, dimensions in mm (inches), not to scale

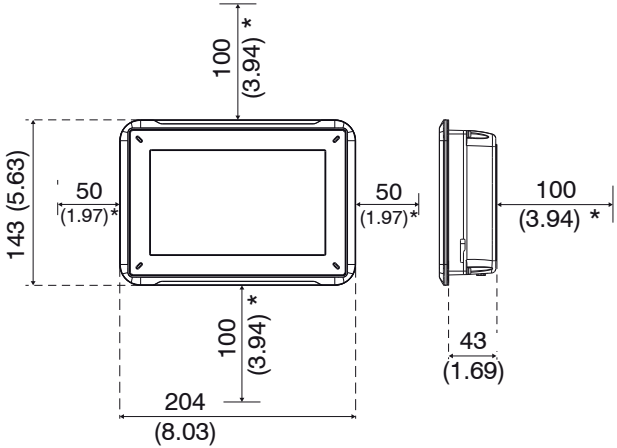

Cut out dimensions for the installation of the digital display: 189 x 128 mm (7.44 x 5.04 inches)

Fig. 3 Dimensional drawing optoCONTROL EDU190-7 Pro, dimensions in mm (inches), not to scale

4.1 Pin Assignment

Depending on the available sensor interface, the optoCONTROL ODC sensors with digital interface can be connected to this EDU190 digital display either via LAN connection or COM connection.

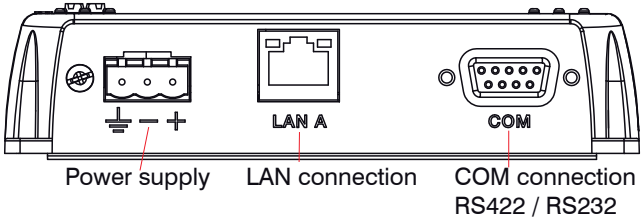

Item	Connection	Description
1	Power supply	+24 VDC (18 ... 32 VDC)
2	LAN A	1 x 10/100 Base-T (RJ-45 shielded)
3	COM	RS422 or RS232

Fig. 4 Ports on the display bottom side

Please refer to the operating instructions of the respectively connected sensor for details on the pin assignment.

Supply voltage:
- Digital display: +24 VDC (18 - 32 VDC)
- Sensor: The exact values can be found in the operating instructions of the respectively connected sensor.

Power consumption:
- EDU190-4 Pro: 12 W (24 V)
- EDU190-7 Pro: 14.4 W (24 V)

Cable PC190-2	Pin	Color	Power supply
	PIN +	white	+24 V
	PIN -	brown	(-)GND

Fig. 5 Pin assignment PC190-2

- Switch off the power supply when you exit the display program or switch off the sensor.
- Switch on the power supply again when you restart the display program or the sensor.

4.2 Cables

Sensor	Required cables	Article no.	Interface	Adapter connection	Remarks
ODC2520	PC/SC2520-3/IF2008 und PC/SC190-3	29011014/ 29011205	RS422	9-pin / 15-pin SubD IF2008 + power	Power, no further signals
ODC2500	SCD2500-3-3/RS232	2901121	RS232	9-pin / 25-pin SubD + open braids	Other signals
ODC2600					
ODC2500	SCD2500-3/EDU190 RS422	29011211	RS422	9-pin / 25-pin SubD	Display only
ODC2600					
ODC2500	SCD2500-3/EDU190/ RS232	29011208	RS232	9-pin / 25-pin SubD	
ODC2600					
ODC2520	SCD2520-3	2901925	Ethernet	RJ45	
ODC1202	SCD1202-x-RS232	2901371	RS232	9-pol. SubD	
ODC1220					
EDU190	PC190-2	29011209	Power	Green connector	24 VDC power supply

Please refer to the individual operating instructions of the corresponding Micro-Epsilon sensors for cables and connections required to operate the individual sensors.

4.3 Connections for optoCONTROL ODC1202 / ODC1220

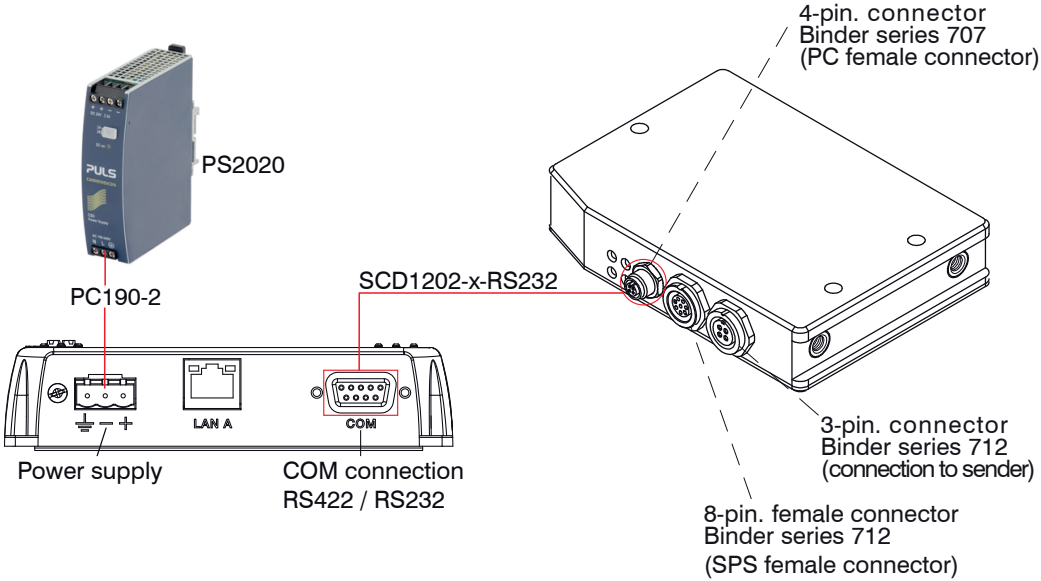

Ports on the display bottom side

Ports on the controller for ODC1202/ ODC1220

Fig. 6 Connections for optoCONTROL ODC1202 / ODC1220

4.4 Connections for optoCONTROL ODC2600 / ODC2500

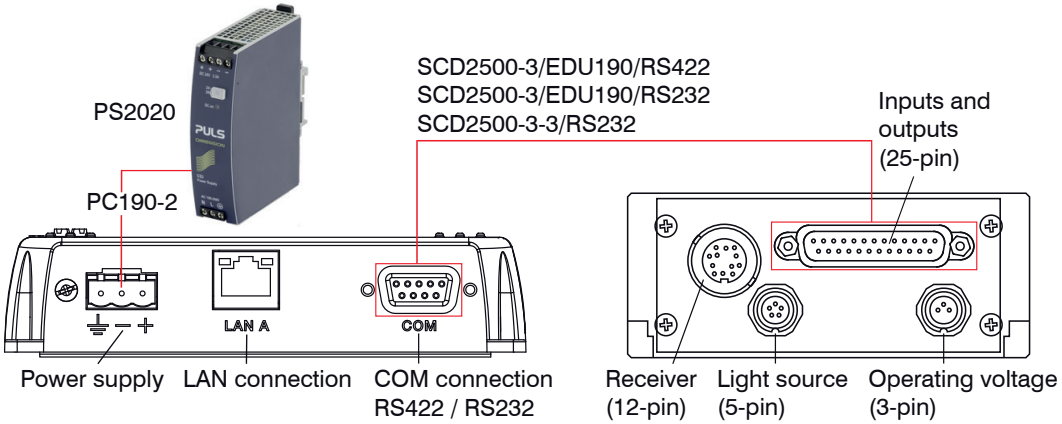

Ports on the display bottom side

Ports on the controller for ODC2600 / ODC2500

Fig. 7 Connections for optoCONTROL ODC2600 / ODC2500

4.5 Connections for optoCONTROL ODC2520

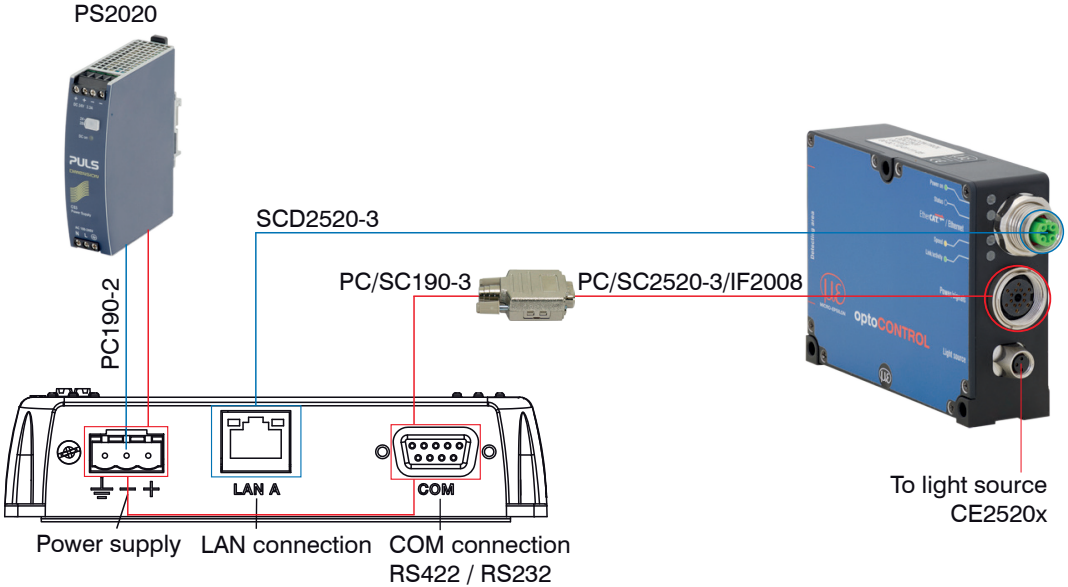

Ports on the display bottom side

Ports on the controller for ODC 2520

Fig. 8 Connections for optoCONTROL ODC2520

The Ethernet connection requires the SCD2520-3 and PC190-2 cables, see A 1. The Ethernet version (blue lines) requires to supply the ODC2520 sensor separately with the operating voltage.

The RS422 connection requires the PC/SC2520-3/IF2008 and PC/SC190-3 cables, see A 1.

With the RS422 variant (red lines), the ODC2520 sensor is supplied via the EDU190 digital display.

4.6 Displays

A green LED on the right side of the display indicates if the transmission is active.	☼	Flashing when the digital display is connected with the sensor.
	●	No flashing when the digital display is not connected with the sensor.
The ON/OFF status is displayed on the blue multicolor LED on the left side of the digital display.	●	ON
	○	OFF

5. Software

5.1 Basic Settings

The digital display is configured to automatically detect the connected sensor type and to adjust the user interface accordingly. It does not matter whether the digital display is connected via the RS232/RS422 connection or the Ethernet connection.

The set standard IP is 169.254.168.150.

i For automatic detection via Ethernet, the sensor should be set to the standard IP address. You can also change the sensor IP address in the address field.

If connection problems occur with Ethernet, please check whether the sensor has been set to the standard IP address. If necessary, reset the sensor to factory settings.

In order to use a different IP address of the EDU190, please contact the MICRO-EPSILON Eltrotec GmbH support, see 7.

i When using the RS232/RS422 serial interface, the standard baud rate of the respective optoCONTROL ODC must be used. If connection problems occur, use the baud rate of the respective factory settings.

In order to use a different setting of the serial interface, please contact the MICRO-EPSILON Eltrotec GmbH support, see 7.

Some changes that are selected via the web interface of the ODC 2520 sensor or the ODC 12XX software will not take effect until the digital display is restarted.

➡ Disconnect the display from the power supply.

➡ Restart the digital display when you need to change the controller settings.

i Refer to the respective operating instructions for the sensor settings.

The software can be set in German or English and has several buttons for the visualization, configuration and retrieval of sensor data.

Functions:

- Display of measured values and programs used
- Using the additional function for circumference calculation
- Defining limit and master values
- Monitoring the connection status

Depending on the sensor, a large number of additional settings such as filters, measuring programs and calculation functions can be set via the sensor's web interface.

5.2 Software

5.2.1 Settings

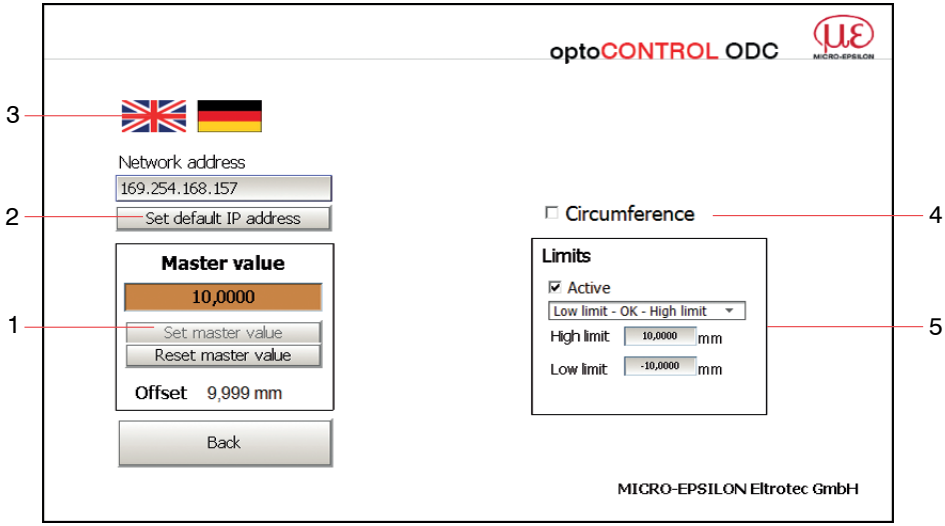

Fig. 9 Settings view

The settings view is displayed via the `Config.` button, see Fig. 10.

1	Master value settings
2	Settings IP address
3	Language setting
4	Circumference calculation from diameter measurement
5	Activating limit value measurement and setting upper `High limit` and lower `Low limit` value.

Master value (1)

To reset or master the display value to a desired value, use a master value. Press the `Set master value` button to confirm. This represents a one-point calibration of the displayed value. When mastering, the deviation from the unmastered measured value is displayed as offset in millimeters. Pressing the `Reset master value` button deletes the value.

Settings IP address (2)

Pressing the `Set default IP address` button confirms the desired IP address. With an active serial connection, the network address settings are not displayed.

To set a new IP address for the sensor, click in the `Network address` field to enter the new IP address.

Language setting (3)

Press the respective button (German or English flag) to set the desired language.

Circumference calculation (4)

Circumference calculation is only available with the diameter measurement. Setting the `checkmark` activates the circumference calculation. The mastered or unmastered measurement value is then multiplied with PI and output as circumference value.

Limit values (5)

When activating the `Active` checkbox, different limit value modes can be selected via a dropdown menu. Entry of 2 limit values and optical display when limit values are exceeded or not reached.

No checkmark in the `Active` checkbox means inactive limit value outputs. The measured value is not highlighted in color.

`Low limit - OK - High limit` [1]	GOOD window	
	`OK`	Measured value within the specified upper and lower limit is highlighted in green.
	`NOK`	Outside of these limits (this window), the measured value is highlighted in red.
`Warn.limit - Limit` [1]	Switches when the warning value `WV` is exceeded, measured value is highlighted in orange. When the value is even further exceeded, the measured value is highlighted in red when the limit value `LV` is exceeded.	
`>Limit` [1]	Switches when the stated upper limit value is exceeded. Black measurement value is highlighted in red.	
`<Limit` [1]	Switches when the stated lower limit value is not reached. Black measurement value is highlighted in red.	

1) OK = okay NOK = not okay High limit = upper limit value Low limit = lower limit value Warn. limit = warning limit

5.2.2 Display Measurement Value

Fig. 10 View measuring data display

1	Connection status
2	Measured value - limit values are indicated in colors
3	Buttons for info window `Info` and for settings window `Config`.
4	Green LED for connection signal; flushes when connection is active.
5	Selected measuring program, see Fig. 11
6	Triggering switched on
7	Display of limit value status OK, >High limit, <Low Limit, >Warn.limit, <Limit, >Limit [1]

1) OK = okay NOK = not okay High limit = upper limit value Low limit = lower limit value Warn. limit = warning limit

	**Edge light/dark** Position of the first light/dark edge (distance from the start of line)
	**Edge dark/light** Position of the first dark/light edge (distance from the start of line)
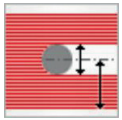	**Diameter/width** Measure, position and center axis of an outer diameter or width of a metal sheet (first light/ dark and last dark/light edge)
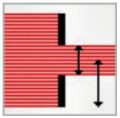	**Gap** Measure, position and center axis of an outer diameter or width of a metal sheet (first light/ dark and last dark/light edge)
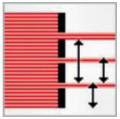	**Arbitrary segments** Differences, positions and numbering or order of the edges.

Fig. 11 Different measuring programs, example ODC 2520

i Please note that the meaning of the displayed icons for the measuring programs may differ significantly depending on the connected sensor.

Therefore, please refer to the corresponding operating instructions of the connected sensor for the exact measurement program meaning of the connected sensor and the displayed measuring program icon.

5.2.3 Sensor Information

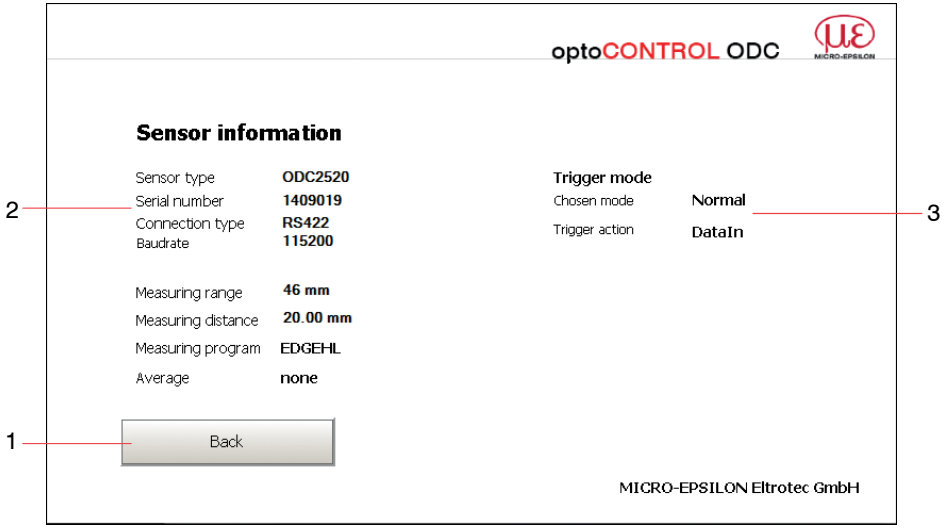

Fig. 12 View sensor information

1	Selected measuring program
2	Info about selected sensor type/connection type RS422 or Ethernet
3	Trigger mode state

6. Liability for Material Defects

All components of the device have been checked and tested for functionality at the factory. However, if defects occur despite our careful quality control, MICRO-EPSILON Eltrotec or your dealer must be notified immediately.

The liability for material defects is 12 months from delivery.

Within this period, defective parts, except for wearing parts, will be repaired or replaced free of charge, if the device is returned to MICRO-EPSILON Eltrotec with shipping costs prepaid. Any damage that is caused by improper handling, the use of force or by repairs or modifications by third parties is not covered by the liability for material defects. Repairs are carried out exclusively by MICRO-EPSILON Eltrotec.

Further claims can not be made. Claims arising from the purchase contract remain unaffected. In particular, MICRO-EPSILON Eltrotec shall not be liable for any consequential, special, indirect or incidental damage. In the interest of further development, MICRO-EPSILON reserves the right to make design changes without notification. For translations into other languages, the German version shall prevail.

7. Service, Repair

If the digital display is defective, please send us the affected parts for repair or exchange.

If the cause of a fault cannot be clearly identified, please send the entire measuring system to:

MICRO-EPSILON Eltrotec GmbH
Manfred-Wörner-Straße 101
73037 Göppingen / Germany

Phone +49 (0) 7161 / 98872-300
Fax +49 (0) 7161 / 98872-303

eltrotec@micro-epsilon.de
www.micro-epsilon.com

8. Decommissioning, Disposal

➡ Remove the power and output cable from the digital display.

Incorrect disposal may cause harm to the environment.

➡ Dispose of the device, its components and accessories, as well as the packaging materials in compliance with the applicable country-specific waste treatment and disposal regulations of the region of use.

Appendix

A 1 Accessories

A 1.1 Connecting the Digital Display to ODC1202 / ODC1220

Art. No.	Model	Description
2901371	SCD1202-x-RS232	Digital output cable, for connection via RS232
29011209	PC190-2	Supply cable for digital display EDU190-x, 2 m long

A 1.2 Connecting the Digital Display to ODC2500 / ODC2600

Art. No.	Model	Description
29011211	SCD2500-3/EDU190/ RS422	Digital output cable, 3 m long, for connection via RS422
29011208	SCD2500-3/EDU190/ RS232	Digital output cable, 3 m long, for connection via RS232
2901121	SCD2500-3-3/RS232	Signal output cable, 3 m long, for connection via RS232 and other signals
29011209	PC190-2	Supply cable for digital display EDU190-x, 2 m long

A 1.3 Connecting the Digital Display to ODC2520

Art. No.	Model	Description
29011014	PC/SC2520-3/IF2008	Interface and supply cable with IF2008-compatible RS422 interface
29011205	PC/SC190-3	Supply and interface cable RS422; 3 m long (imperative for power supply of the sensor and the digital display)
2901925	SCD2520-3	Digital output cable, 3 m long, Ethernet connection
29011209	PC190-2	Supply cable for digital display EDU190-x, 2 m long

MICRO-EPSILON Eltrotec GmbH
Manfred-Wörner-Straße 101 · 73037 Göppingen / Germany
Tel. +49 (0) 7161 / 98872-300 · Fax +49 (0) 7161 / 98872-303
eltrotec@micro-epsilon.de · www.micro-epsilon.com

X9751398-A011079HDR